GE APPLIANCES

SUBMITTALS

Caliber Series

Rev. Nov. 2021

ASH109CRAWA / ASYW09CRAWA

ASH109CRDWA / ASYW09CRDWA

ASH112CRAWA / ASYW12CRAWA

ASH112CRDWA / ASYW12CRAWA

ASH118CRDWA / ASYW18CRDWA

ASH124CRDW / ASYW24CRDWA

AHRI CERTIFIED® www.ahridirectory.org Unitary Small HP AHRI Standard 210/240 Certification applies only when the complete system is listed with AHRI.

ETL LISTED Intertek

GE APPLIANCES a Haier company

For more information visit us:
www.geappliances.com/ductless

GE APPLIANCES

Revision History

Rev. May 2020 - Submittal edition release.
Rev. June 2020 - Accessories update.
Rev. Aug. 2020 - Controller updates.
Rev. Oct. 2020 - Heating/cooling performance updates.
Rev. Feb. 2021 - Added 208/230V 9K and 12K units, accessory tables.
Rev. May 2021 - Capacity table revisions.
Rev. Nov. 2021 - SEER/EER, HSPF corrections.

GE APPLIANCES

CALIBER SERIES SUBMITTAL

9,000 BTU Wall Mount Single-Zone Heat Pump System

ASH109CRAWA / ASYW09CRAWA

Job Name: _____

Purchaser: _____

Submitted To: _____

Construction: _____

Reference: _____

Approval: _____

Date: _____

Submitted By: _____

Unit: _____

Drawing #: _____

Electrical Requirement	
Power Supply	115V, 1 Phase, 60 HZ
Operating Voltage Range	104-127 VAC
Recommended Fuse/Breaker Size	20A
MCA	18A

Connecting cable to indoor units must be 14/4 AWG unshielded stranded copper. Cable must be ran continuous, without splicing.

Operating Range	
Cooling with Wind Baffle	14~115°F (-10~46°C)
Cooling Without Wind Baffle	23~115°F (-5~46°C)
Heating	-4~75°F (-20~24°C)

Cooling Performance	
Rated Cooling Capacity	9,000 BTU
Cooling Capacity Range	3,800~12,000 BTU
Rated Power input	810 W
SEER	18.0
EER	10.5

Heating Performance	
Rated Heating Capacity	10,000 BTU
Heating Capacity Range	4,100~12,000 BTU
HSPF	11.0

Accessories		
Controller	Model/Part Number	Note
Ships with	Standard Remote Control (WJ01X25115)	
Compatible Controller	Simplified Wired Controller (ACT17CWA)	Requires WK-B kit
WiFi Module	AWF01RWA	
Wind Baffle	QAWB41A	

Pipe Length		
Minimum Pipe Length		6 ft
Maximum Pipe Length		66 ft
Maximum Pipe Height Difference		33 ft
Flare Connections	Liquid	1/4”
	Vapor	3/8”

AHRI CERTIFIED® www.ahridirectory.org Unitary Small HP AHRI Standard 210/240 Certification applies only when the complete system is listed with AHRI.

C LISTED US Intertek

GE APPLIANCES a Haier company

For more information visit us:
www.geappliances.com/ductless

CALIBER SERIES SUBMITTAL

GE APPLIANCES

9,000 BTU Wall Mount Single-Zone Heat Pump System

ASH109CRAWA / ASYW09CRAWA

Indoor Unit	
Uncrated Dimension (HxWxD)	11 3/8 x 34 x 7 7/8 in (290 x 864 x 200 mm)
Crated (HxWxD)	14 x 37 1/2 x 11 in (355 x 954 x 279 mm)
Airflow CFM (Turbo/High/Med/Low/Quiet)	305/295/280/265/240
Indoor Sound Level dB (Turbo/High/Med/Low/Quiet)	39/37/33/28/23
Motor Rating (HP)	0.064
Heat Exchanger Fin Type	Blue Fin
Weight (Ship/Net)	24.7/19.9 lbs

Outdoor Unit	
Compressor	DC inverter Driven Rotary
Uncrated Dimension (HxWxD)	21 1/4 x 30 3/4 x 9 5/8 in (540 x 780 x 245 mm)
Crated (HxWxD)	24 3/8 x 36 1/4 x 13 7/8 in (620 x 920 x 351 mm)
Outdoor Sound Rating dB	47
Heat Exchanger Fin Type	Blue Fin
Weight (Ship/Net)	66.1/58.4 lbs
Factory Refrigerant Charge	R-410A (26.5 oz)

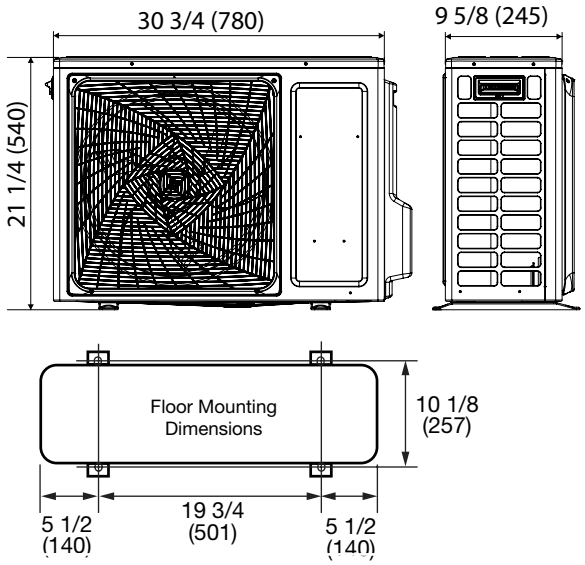

Heating Capacity Data

Outdoor Air Temp DB	Indoor Temperature								
	59°F (15°C)			68°F (20°C)			77°F (25°C)		
	Maximum Capacity (Btu/h)	Power Usage (w)	COP	Maximum Capacity (Btu/h)	Power Usage (w)	COP	Maximum Capacity (Btu/h)	Power Usage (w)	COP
-4°F (-20°C)	5,420	1,040	1.53	5,210	1,110	1.38	4,900	1,170	1.23
5°F (-15°C)	7,050	1,000	2.07	6,710	1,060	1.86	6,370	1,120	1.67
17°F (-8°C)	8,050	700	3.37	7,590	740	3.01	7,290	780	2.74
47°F (8°C)	11,340	870	3.82	10,500	950	3.24	9,660	1,030	2.75

Cooling Capacity Data

Outdoor Air Temp DB	Indoor Temperature								
	70°F (21°C)			75°F (24°C)			80°F (27°C)		
	Maximum Capacity (Btu/h)	Power Usage (w)	EER	Maximum Capacity (Btu/h)	Power Usage (w)	EER	Maximum Capacity (Btu/h)	Power Usage (w)	EER
14°F (-10°C)*	7,490	250	29.96	7,740	250	30.96	8,320	260	32.00
23°F (-5°C)	7,490	260	28.81	7,740	260	29.77	8,320	270	30.81
41°F (5°C)	7,490	270	27.74	7,740	270	28.67	8,320	280	29.71
45°F (7.2°C)	7,490	270	27.74	7,740	270	28.67	8,320	280	29.71
55°F (12.8°C)	7,490	280	26.75	7,740	280	27.64	8,320	290	28.69
65°F (18°C)	8,590	670	12.82	8,870	680	13.04	9,540	700	13.63
75°F (24°C)	9,250	680	13.60	9,560	700	13.66	10,280	720	14.28
85°F (29°C)	10,160	710	14.31	10,500	730	14.38	11,290	750	15.05
95°F (35°C)	8,690	760	11.43	8,970	780	11.50	9,650	800	12.06
105°F (41°C)	8,340	770	10.83	8,620	790	10.91	9,270	810	11.44
115°F (46°C)	5,970	390	15.31	6,170	400	15.43	6,630	420	15.79

Heating and cooling capacities and power usage are measured under the assumption of indoor humidity of 46%.
*Cooling capacities under low ambient temperatures below 23°F (-5°C) are tested when using wind baffle on outdoor unit.

GE APPLIANCES

CALIBER SERIES SUBMITTAL

9,000 BTU Wall Mount Single-Zone Heat Pump System

ASH109CRDWA / ASYW09CRDWA

Job Name: _____

Purchaser: _____

Submitted To: _____

Construction: _____

Reference: _____

Approval: _____

Date: _____

Submitted By: _____

Unit: _____

Drawing #: _____

Electrical Requirement	
Power Supply	208/230V, 1 Phase, 60 HZ
Operating Voltage Range	187~253 VAC
Recommended Fuse/Breaker Size	15A
MCA	12A

Connecting cable to indoor units must be 14/4 AWG unshielded stranded copper. Cable must be ran continuous, without splicing.

Operating Range	
Cooling with Wind Baffle	-4~115°F (-20~46°C)
Cooling Without Wind Baffle	23~115°F (-5~46°C)
Heating	-4~75°F (-20~24°C)

Cooling Performance	
Rated Cooling Capacity	9,000 BTU
Cooling Capacity Range	3,800~10,000 BTU
Rated Power input	800 W
SEER	18.0
EER	11.0

Heating Performance	
Rated Heating Capacity	10,000 BTU
Heating Capacity Range	4,100~11,000 BTU
HSPF	10.0

Pipe Length		
Minimum Pipe Length		6 ft
Maximum Pipe Length		66 ft
Maximum Pipe Height Difference		33 ft
Flare Connections	Liquid	1/4”
	Vapor	3/8”

Accessories		
Controller	Model/Part Number	Note
Ships with	Standard Remote Control (WJ01X25115)	
Compatible Controller	Simplified Wired Controller (ACT17CWA)	Requires WK-B kit
WiFi Module	N/A (Embedded)	
Wind Baffle	QAWB41A	

GE APPLIANCES
a Haier company

AHRI CERTIFIED® www.ahridirectory.org Unitary Small HP AHRI Standard 210/240

Intertek

For more information visit us:
www.geappliances.com/ductless

CALIBER SERIES SUBMITTAL

GE APPLIANCES

9,000 BTU Wall Mount Single-Zone Heat Pump System

ASH109CRDWA / ASYW09CRDWA

Indoor Unit	
Uncrated Dimension (HxWxD)	11 7/8 x 33 3/4 x 7 3/4 in (301 x 856 x 196 mm)
Crated (HxWxD)	15 3/8 x 37 1/2 x 11 1/8 in (389 x 952 x 283 mm)
Airflow CFM (Turbo/High/Med/Low/Quiet)	421/332/292/242/200
Indoor Sound Level dB (Turbo/High/Med/Low/Quiet)	42/36/33/29/26
Motor Rating (HP)	0.064
Heat Exchanger Fin Type	Blue Fin
Weight (Ship/Net)	26.9/21.2 lbs

Outdoor Unit	
Compressor	DC inverter Driven Rotary
Uncrated Dimension (HxWxD)	21 3/4 x 31 1/2 x 10 7/8 in (553 x 800 x 275 mm)
Crated (HxWxD)	25 3/8 x 37 1/2 x 16 1/8 in 645 x 954 x 409 mm)
Outdoor Sound Rating dB	48
Heat Exchanger Fin Type	Blue Fin
Weight (Ship/Net)	76.1/63.5 lbs
Factory Refrigerant Charge	R-410A (32.8 oz)

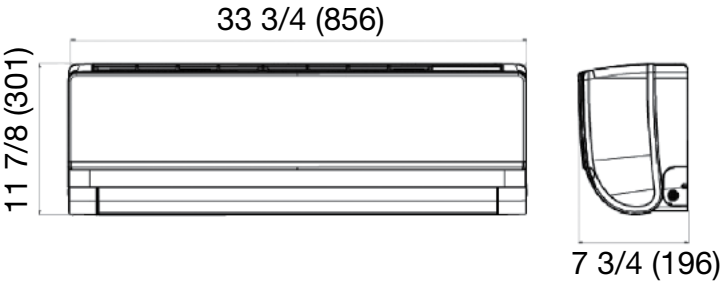

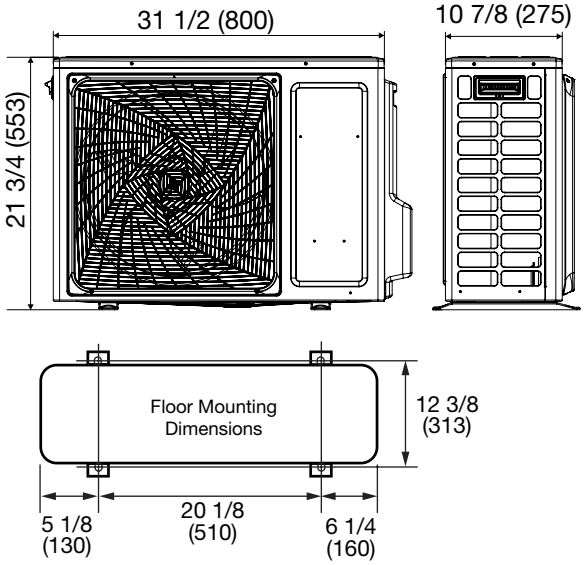

Heating Capacity Data

Outdoor Air Temp DB	Indoor Temperature								
	60°F (16°C)			70°F (21°C)			77°F (25°C)		
	Maximum Capacity (Btu/h)	Power Usage (w)	COP	Maximum Capacity (Btu/h)	Power Usage (w)	COP	Maximum Capacity (Btu/h)	Power Usage (w)	COP
-4°F (-20°C)	5,500	980	1.64	5,000	1,000	1.46	4,500	1,020	1.29
5°F (-15°C)	6,500	960	1.98	6,000	980	1.79	5,500	1,000	1.61
17°F (-8°C)	8,000	890	2.63	7,500	910	2.41	7,000	930	2.21
47°F (8°C)	11,500	830	4.06	11,000	850	3.79	10,500	870	3.54

Cooling Capacity Data

Outdoor Air Temp DB	Indoor Set Temperature								
	70°F (21°C)			75°F (24°C)			80°F (27°C)		
	Maximum Capacity (Btu/h)	Power Usage (w)	EER	Maximum Capacity (Btu/h)	Power Usage (w)	EER	Maximum Capacity (Btu/h)	Power Usage (w)	EER
14°F (-10°C)*	7,590	320	23.72	7,850	330	23.79	8,320	340	24.47
32°F (0°C)	7,590	380	19.97	7,790	390	19.97	8,320	400	20.80
50°F (10°C)	7,690	450	17.09	7,890	460	17.15	8,320	470	17.70
65°F (18°C)	8,690	670	12.97	8,970	690	13.00	9,540	720	13.25
75°F (24°C)	9,350	690	13.55	9,560	720	13.28	10,280	740	13.89
85°F (29°C)	11,000	900	12.22	11,500	920	12.50	12,000	940	12.77
95°F (35°C)	10,000	1,000	10.00	10,500	1,020	10.29	11,000	1,040	10.58
105°F (41°C)	8,340	770	10.83	8,620	790	10.91	9,270	810	11.44
115°F (46°C)	5,970	390	15.31	6,170	400	15.43	6,630	420	15.79

Heating and cooling capacities and power usage are measured under the assumption of indoor humidity of 46%.
*Cooling capacities under low ambient temperatures below 23°F (-5°C) are tested when using wind baffle on outdoor unit.

GE APPLIANCES

CALIBER SERIES SUBMITTAL

12,000 BTU Wall Mount Single-Zone Heat Pump System

ASH112CRAWA / ASYW12CRAWA

Job Name: _____

Purchaser: _____

Submitted To: _____

Construction: _____

Reference: _____

Approval: _____

Date: _____

Submitted By: _____

Unit: _____

Drawing #: _____

Electrical Requirement	
Power Supply	115V, 1 Phase, 60 HZ
Operating Voltage Range	104-127 VAC
Recommended Fuse/Breaker Size	20A
MCA	18A

Connecting cable to indoor units must be 14/4 AWG unshielded stranded copper. Cable must be ran continuous, without splicing.

Operating Range	
Cooling with Wind Baffle	-4~115°F (-20~46°C)
Cooling Without Wind Baffle	23~115°F (-5~46°C)
Heating	-4~75°F (-20~24°C)

Cooling Performance	
Rated Cooling Capacity	12,000 BTU
Cooling Capacity Range	4,100~12,500 BTU
Rated Power input	1,200 W
SEER	18.0
EER	10.0

Heating Performance	
Rated Heating Capacity	12,000 BTU
Heating Capacity Range	4,500~16,000 BTU
HSPF	11.0

Accessories		
Controller	Model/Part Number	Note
Ships with	Standard Remote Control (WJ01X25115)	
Compatible Controller	Simplified Wired Controller (ACT17CWA)	Requires WK-B kit
WiFi Module	AWF01RWA	
Wind Baffle	QAWB41A	

Pipe Length		
Minimum Pipe Length		6 ft
Maximum Pipe Length		66 ft
Maximum Pipe Height Difference		33 ft
Flare Connections	Liquid	1/4”
	Vapor	3/8”

AHRI CERTIFIED® www.ahridirectory.org Unitary Small HP AHRI Standard 210/240 Certification applies only when the complete system is listed with AHRI.

C LISTED US Intertek

GE APPLIANCES a Haier company

For more information visit us:
www.geappliances.com/ductless

Rev. Nov. 2021

CALIBER SERIES SUBMITTAL

GE APPLIANCES

12,000 BTU Wall Mount Single-Zone Heat Pump System

ASH112CRAWA / ASYW12CRAWA

Indoor Unit	
Uncrated Dimension (HxWxD)	11 3/8 x 34 x 7 7/8 in (290 x 864 x 200 mm)
Crated (HxWxD)	14 x 37 1/2 x 11 in (355 x 954 x 279 mm)
Airflow CFM (Turbo/High/Med/Low/Quiet)	310/300/287/275/245
Indoor Sound Level dB (Turbo/High/Med/Low/Quiet)	39/37/33/28/23
Motor Rating (HP)	0.064
Heat Exchanger Fin Type	Blue Fin
Weight (Ship/Net)	24.7/19.9 lbs

Outdoor Unit	
Compressor	DC inverter Driven Rotary
Uncrated Dimension (HxWxD)	21 1/4 x 30 3/4 x 9 5/8 in (540 x 780 x 245 mm)
Crated (HxWxD)	24 3/8 x 36 1/4 x 13 7/8 in (620 x 920 x 351 mm)
Outdoor Sound Rating dB	50
Heat Exchanger Fin Type	Blue Fin
Weight (Ship/Net)	71.7/63.9 lbs
Factory Refrigerant Charge	R-410A (35.3 oz)

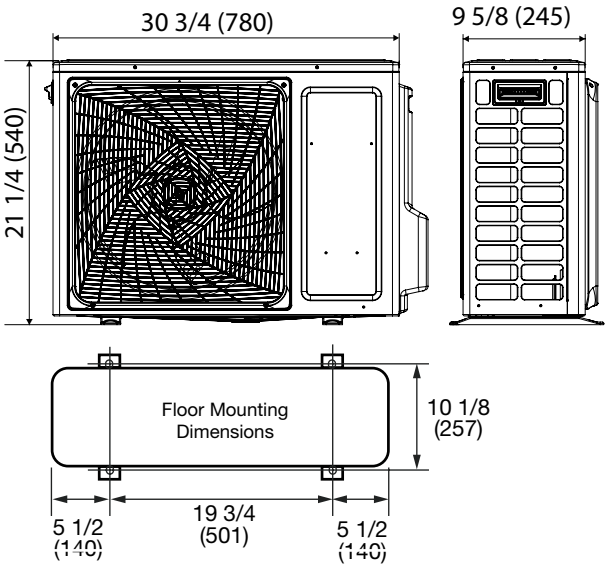

Heating Capacity Data

Outdoor Air Temp DB	Indoor Temperature								
	59°F (15°C)			68°F (20°C)			77°F (25°C)		
	Maximum Capacity (Btu/h)	Power Usage (w)	COP	Maximum Capacity (Btu/h)	Power Usage (w)	COP	Maximum Capacity (Btu/h)	Power Usage (w)	COP
-4°F (-20°C)	6,550	1,320	1.45	6,300	1,400	1.32	5,920	1,470	1.18
5°F (-15°C)	9,380	1,270	2.16	8,930	1,350	1.94	8,480	1,430	1.74
17°F (-8°C)	10,810	890	3.56	10,200	950	3.15	9,790	1,010	2.84
47°F (8°C)	13,850	1,040	3.90	12,820	1,130	3.33	11,790	1,220	2.83

Cooling Capacity Data

Outdoor Air Temp DB	Indoor Temperature								
	70°F (21°C)			75°F (24°C)			80°F (27°C)		
	Maximum Capacity (Btu/h)	Power Usage (w)	EER	Maximum Capacity (Btu/h)	Power Usage (w)	EER	Maximum Capacity (Btu/h)	Power Usage (w)	EER
14°F (-10°C)*	9,940	330	30.12	9,940	340	29.24	10,800	350	30.86
23°F (-5°C)	9,940	340	29.24	9,940	350	28.40	10,800	360	30.00
41°F (5°C)	9,940	350	28.40	9,940	360	27.61	10,800	370	29.19
45°F (7.2°C)	9,720	360	27.00	10,040	370	27.14	10,800	380	28.42
55°F (12.8°C)	9,720	370	26.27	10,040	380	26.42	10,800	390	27.69
65°F (18°C)	10,250	930	11.02	10,590	950	11.15	11,390	980	11.62
75°F (24°C)	11,740	990	11.86	12,130	1,020	11.89	13,040	1,050	12.42
85°F (29°C)	12,830	1,050	12.22	13,260	1,070	12.39	14,260	1,110	12.85
95°F (35°C)	11,720	1,110	10.56	12,110	1,130	10.72	13,020	1,160	11.22
105°F (41°C)	11,120	1,160	9.59	11,490	1,190	9.66	12,360	1,220	10.13
115°F (46°C)	7,960	620	12.84	8,230	630	13.06	8,850	650	13.62

Heating and cooling capacities and power usage are measured under the assumption of indoor humidity of 46%.
*Cooling capacities under low ambient temperatures below 23°F (-5°C) are tested when using wind baffle on outdoor unit.

GE APPLIANCES

CALIBER SERIES SUBMITTAL

12,000 BTU Wall Mount Single-Zone Heat Pump System

ASH112CRDWA / ASYW12CRAWA

Job Name: _____

Purchaser: _____

Submitted To: _____

Construction: _____

Reference: _____

Approval: _____

Date: _____

Submitted By: _____

Unit: _____

Drawing #: _____

Electrical Requirement	
Power Supply	208/230V, 1 Phase, 60 HZ
Operating Voltage Range	187~253 VAC
Recommended Fuse/Breaker Size	15A
MCA	12A

Connecting cable to indoor units must be 14/4 AWG unshielded stranded copper. Cable must be ran continuous, without splicing.

Operating Range	
Cooling with Wind Baffle	-4~115°F (-20~46°C)
Cooling Without Wind Baffle	23~115°F (-5~46°C)
Heating	-4~75°F (-20~24°C)

Cooling Performance	
Rated Cooling Capacity	12,000 BTU
Cooling Capacity Range	4,100~13,000 BTU
Rated Power input	1,100 W
SEER	18.0
EER	11.0

Heating Performance	
Rated Heating Capacity	12,000 BTU
Heating Capacity Range	4,500~13,000 BTU
HSPF	10.0

Pipe Length		
Minimum Pipe Length		6 ft
Maximum Pipe Length		66 ft
Maximum Pipe Height Difference		33 ft
Flare Connections	Liquid	1/4”
	Vapor	3/8”

Accessories		
Controller	Model/Part Number	Note
Ships with	Standard Remote Control (WJ01X25115)	
Compatible Controller	Simplified Wired Controller (ACT17CWA)	Requires WK-B kit
WiFi Module	N/A (Embedded)	
Wind Baffle	QAWB41A	

GE APPLIANCES
a Haier company

AHRI CERTIFIED® www.ahridirectory.org
Unitary Small HP
AHRI Standard 210/240
Certification applies only when the complete system is listed with AHRI.

C ETL LISTED US
Intertek

For more information visit us:
www.geappliances.com/ductless

CALIBER SERIES SUBMITTAL

GE APPLIANCES

12,000 BTU Wall Mount Single-Zone Heat Pump System

ASH112CRDWA / ASYW12CRAWA

Indoor Unit	
Uncrated Dimension (HxWxD)	11 7/8 x 33 3/4 x 7 3/4 in (301 x 856 x 196 mm)
Crated (HxWxD)	15 3/8 x 37 1/2 x 11 1/8 in (389 x 952 x 283 mm)
Airflow CFM (Turbo/High/Med/Low/Quiet)	426/360/310/265/200
Indoor Sound Level dB (Turbo/High/Med/Low/Quiet)	42/38/34/31/26
Motor Rating (HP)	0.064
Heat Exchanger Fin Type	Blue Fin
Weight (Ship/Net)	26.9/21.2 lbs

Outdoor Unit	
Compressor	DC inverter Driven Rotary
Uncrated Dimension (HxWxD)	21 3/4 x 31 1/2 x 10 7/8 in (553 x 800 x 275 mm)
Crated (HxWxD)	25 3/8 x 37 1/2 x 16 1/8 in 645 x 954 x 409 mm)
Outdoor Sound Rating dB	50
Heat Exchanger Fin Type	Blue Fin
Weight (Ship/Net)	82.2/69.7 lbs
Factory Refrigerant Charge	R-410A (40.6 oz)

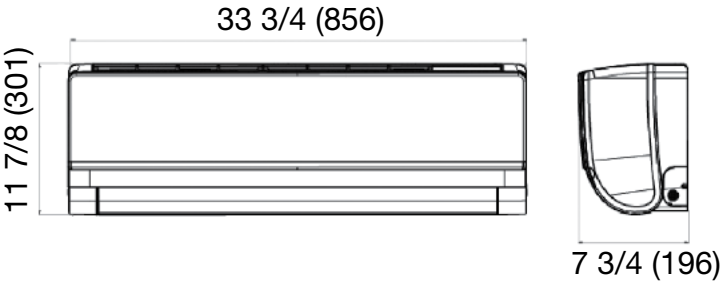

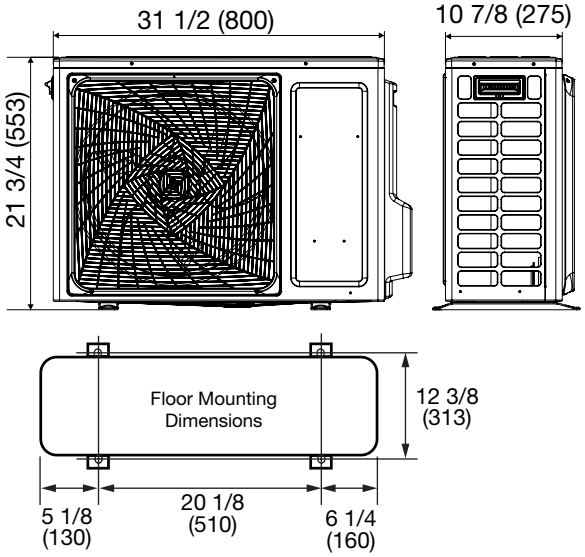

Heating Capacity Data

Outdoor Air Temp DB	Indoor Temperature								
	60°F (16°C)			70°F (21°C)			77°F (25°C)		
	Maximum Capacity (Btu/h)	Power Usage (w)	COP	Maximum Capacity (Btu/h)	Power Usage (w)	COP	Maximum Capacity (Btu/h)	Power Usage (w)	COP
-4°F (-20°C)	8,000	1,300	1.80	7,500	1,320	1.66	7,000	1,340	1.53
5°F (-15°C)	9,000	1,280	2.06	8,500	1,300	1.92	8,000	1,320	1.78
17°F (-8°C)	10,500	1,080	2.85	10,000	1,100	2.66	9,500	1,120	2.49
47°F (8°C)	13,000	1,030	3.70	12,500	1,050	3.49	12,000	1,070	3.29

Cooling Capacity Data

Outdoor Air Temp DB	Indoor Set Temperature								
	70°F (21°C)			75°F (24°C)			80°F (27°C)		
	Maximum Capacity (Btu/h)	Power Usage (w)	EER	Maximum Capacity (Btu/h)	Power Usage (w)	EER	Maximum Capacity (Btu/h)	Power Usage (w)	EER
14°F (-10°C)*	9,950	450	22.11	10,200	460	22.17	10,800	470	22.98
32°F (0°C)	9,950	550	18.09	10,900	570	19.12	11,450	580	19.74
50°F (10°C)	9,960	630	15.81	10,900	650	16.77	11,450	670	17.09
65°F (18°C)	10,350	980	10.56	11,090	990	11.20	11,490	1,120	10.26
75°F (24°C)	11,840	1,050	11.28	12,330	1,070	11.52	12,300	1,090	11.28
85°F (29°C)	12,500	1,080	11.57	12,800	1,150	11.13	13,000	1,160	11.21
95°F (35°C)	12,000	1,100	10.91	12,200	1,160	10.52	12,500	1,170	10.68
105°F (41°C)	11,220	1,000	11.22	11,590	1,020	11.36	12,360	1,050	11.77
115°F (46°C)	8,060	670	12.03	8,330	690	12.07	8,950	710	12.61

Heating and cooling capacities and power usage are measured under the assumption of indoor humidity of 46%.
*Cooling capacities under low ambient temperatures below 23°F (-5°C) are tested when using wind baffle on outdoor unit.

GE APPLIANCES

CALIBER SERIES SUBMITTAL

18,000 BTU Wall Mount Single-Zone Heat Pump System

ASH118CRDWA / ASYW18CRDWA

Job Name: _____

Purchaser: _____

Submitted To: _____

Construction: _____

Reference: _____

Approval: _____

Date: _____

Submitted By: _____

Unit: _____

Drawing #: _____

Electrical Requirement	
Power Supply	208/230V, 1 Phase, 60 HZ
Operating Voltage Range	187~253 VAC
Recommended Fuse/Breaker Size	20A
MCA	17A

Connecting cable to indoor units must be 14/4 AWG unshielded stranded copper. Cable must be ran continuous, without splicing.

Operating Range	
Cooling with Wind Baffle	0~115°F (-18~46°C)
Cooling Without Wind Baffle	23~115°F (-5~46°C)
Heating	-4~75°F (-20~24°C)

Cooling Performance	
Rated Cooling Capacity	18,000 BTU
Cooling Capacity Range	5,000~19,000 BTU
Rated Power input	1,650 W
SEER	18.0
EER	10.0

Heating Performance	
Rated Heating Capacity	19,000 BTU
Heating Capacity Range	5,400~22,000 BTU
HSPF	10.5

Accessories		
Controller	Model/Part Number	Note
Ships with	Standard Remote Control (WJ01X25115)	
Compatible Controller	Simplified Wired Controller (ACT17CWA)	Requires WK-B kit
WiFi Module	AWF01RWA	
Wind Baffle	QAWB41A	

Pipe Length		
Minimum Pipe Length		6 ft
Maximum Pipe Length		83 ft
Maximum Pipe Height Difference		50 ft
Flare Connections	Liquid	1/4”
	Vapor	1/2”

AHRI CERTIFIED® www.ahridirectory.org Unitary Small HP AHRI Standard 210/240 Certification applies only when the complete system is listed with AHRI.

C ETL LISTED US Intertek

GE APPLIANCES a Haier company

For more information visit us:
www.geappliances.com/ductless

CALIBER SERIES SUBMITTAL

GE APPLIANCES

18,000 BTU Wall Mount Single-Zone Heat Pump System

ASH118CRDWA / ASYW18CRDWA

Indoor Unit	
Uncrated Dimension (HxWxD)	12 1/2 x 39 5/8 x 8 7/8 in (318 x 1008 x 225 mm)
Crated (HxWxD)	15 7/8 x 42 3/4 x 13 in (403 x 1085 x 329 mm)
Airflow CFM (Turbo/High/Med/Low/Quiet)	545/530/505/475/460
Indoor Sound Level dB (Turbo/High/Med/Low/Quiet)	45/43/39/36/33
Motor Rating (HP)	0.064
Heat Exchanger Fin Type	Blue Fin
Weight (Ship/Net)	33/26.5 lbs

Outdoor Unit	
Compressor	DC inverter Driven Rotary
Uncrated Dimension (HxWxD)	27 1/2 x 35 x 13 7/8 in (697 x 890 x 353 mm)
Crated (HxWxD)	30 3/4 x 41 1/8 x 18 1/8 in (780 x 1046 x 460 mm)
Outdoor Sound Rating dB	56
Heat Exchanger Fin Type	Blue Fin
Weight (Ship/Net)	105.8/97 lbs
Factory Refrigerant Charge	R-410A (40.6 oz)

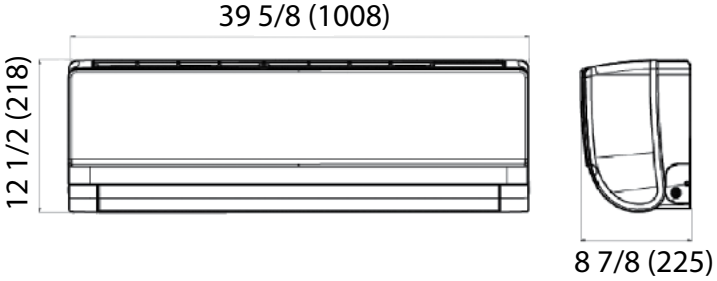

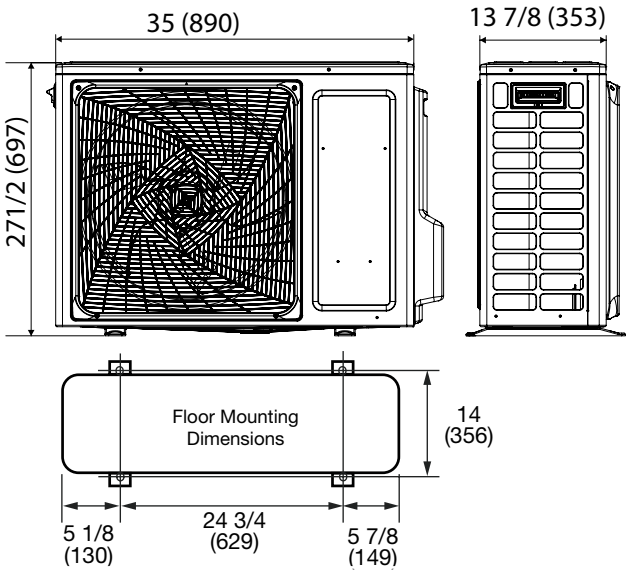

Heating Capacity Data

Outdoor Air Temp DB	Indoor Temperature								
	59°F (15°C)			68°F (20°C)			77°F (25°C)		
	Maximum Capacity (Btu/h)	Power Usage (w)	COP	Maximum Capacity (Btu/h)	Power Usage (w)	COP	Maximum Capacity (Btu/h)	Power Usage (w)	COP
-4°F (-20°C)	9,980	2,120	1.38	9,600	2,260	1.24	9,020	2,370	1.12
5°F (-15°C)	13,230	2,040	1.90	12,600	2,170	1.70	11,970	2,300	1.53
17°F (-8°C)	16,880	1,600	3.09	15,920	1,700	2.74	15,280	1,800	2.49
47°F (8°C)	20,680	1,650	3.67	19,150	1,790	3.14	17,620	1,930	2.68

Cooling Capacity Data

Outdoor Air Temp DB	Indoor Temperature								
	70°F (21°C)			75°F (24°C)			80°F (27°C)		
	Maximum Capacity (Btu/h)	Power Usage (w)	EER	Maximum Capacity (Btu/h)	Power Usage (w)	EER	Maximum Capacity (Btu/h)	Power Usage (w)	EER
14°F (-10°C)*	15,680	620	25.29	16,200	630	25.71	17,420	650	26.80
23°F (-5°C)	15,680	630	24.89	16,200	640	25.31	17,420	660	26.39
41°F (5°C)	15,680	640	24.50	16,200	650	24.92	17,420	670	26.00
45°F (7.2°C)	15,680	650	24.12	16,200	660	24.55	17,420	680	25.62
55°F (12.8°C)	15,680	660	23.76	16,200	670	24.18	17,420	690	25.25
65°F (18°C)	16,950	1,670	10.15	17,510	1,710	10.24	18,830	1,760	10.70
75°F (24°C)	18,370	1,640	11.20	18,990	1,680	11.30	20,420	1,730	11.80
85°F (29°C)	19,650	1,740	11.29	20,310	1,770	11.47	21,840	1,830	11.93
95°F (35°C)	18,550	1,830	10.14	19,170	1,870	10.25	20,620	1,920	10.74
105°F (41°C)	17,610	1,920	9.17	18,190	1,960	9.28	19,560	2,020	9.68
115°F (46°C)	12,610	1,030	12.24	13,030	1,050	12.41	14,010	1,080	12.97

Heating and cooling capacities and power usage are measured under the assumption of indoor humidity of 46%.
*Cooling capacities under low ambient temperatures below 23°F (-5°C) are tested when using wind baffle on outdoor unit.

GE APPLIANCES

CALIBER SERIES SUBMITTAL

24,000 BTU Wall Mount Single-Zone Heat Pump System

ASH124CRDW / ASYW24CRDWA

Job Name: _____

Purchaser: _____

Submitted To: _____

Construction: _____

Reference: _____

Approval: _____

Date: _____

Submitted By: _____

Unit: _____

Drawing #: _____

Electrical Requirement	
Power Supply	208/230V, 1 Phase, 60 HZ
Operating Voltage Range	187~253 VAC
Recommended Fuse/Breaker Size	25A
MCA	19A

Connecting cable to indoor units must be 14/4 AWG unshielded stranded copper. Cable must be ran continuous, without splicing.

Operating Range	
Cooling with Wind Baffle	0~115°F (-18~46°C)
Cooling Without Wind Baffle	23~115°F (-5~46°C)
Heating	-4~75°F (-20~24°C)

Cooling Performance	
Rated Cooling Capacity	24,000 BTU
Cooling Capacity Range	6,500~26,000 BTU
Rated Power input	2,150 W
SEER	18.0
EER	10.0

Heating Performance	
Rated Heating Capacity	26,000 BTU
Heating Capacity Range	6,800~28,000 BTU
HSPF	10.0

Pipe Length		
Minimum Pipe Length		6 ft
Maximum Pipe Length		83 ft
Maximum Pipe Height Difference		50 ft
Flare Connections	Liquid	1/4”
	Vapor	1/2”

Accessories		
Controller	Model/Part Number	Note
Ships with	Standard Remote Control (WJ01X25115)	
Compatible Controller	Simplified Wired Controller (ACT17CWA)	Requires WK-B kit
WiFi Module	AWF01RWA	
Wind Baffle	QAWB45A	

AHRI CERTIFIED® www.ahridirectory.org Unitary Small HP AHRI Standard 210/240 Certification applies only when the complete system is listed with AHRI.

C ETL LISTED US Intertek

GE APPLIANCES a Haier company

For more information visit us:
www.geappliances.com/ductless

CALIBER SERIES SUBMITTAL

GE APPLIANCES

24,000 BTU Wall Mount Single-Zone Heat Pump System

ASH124CRDW / ASYW24CRDWA

Indoor Unit	
Uncrated Dimension (HxWxD)	13 1/4 x 44 1/4 x 9 1/2 in (335 x 1125 x 240 mm)
Crated (HxWxD)	16 1/2 x 47 1/2 x 13 1/2 in (418 x 1206 x 342 mm)
Airflow CFM (Turbo/High/Med/Low/Quiet)	665/650/610/570/555
Indoor Sound Level dB (Turbo/High/Med/Low/Quiet)	47/45/40/37/34
Motor Rating (HP)	0.094
Heat Exchanger Fin Type	Blue Fin
Weight (Ship/Net)	38.6/30.9 lbs

Outdoor Unit	
Compressor	DC inverter Driven Rotary
Uncrated Dimension (HxWxD)	30 x 36 1/4 x 15 1/8 in (762 x 920 x 385 mm)
Crated (HxWxD)	33 1/4 x 42 3/4 x 19 1/8 in (843 x 1085 x 487 mm)
Outdoor Sound Rating dB	53
Heat Exchanger Fin Type	Blue Fin
Weight (Ship/Net)	121.3/112.5 lbs
Factory Refrigerant Charge	R-410A (67 oz)

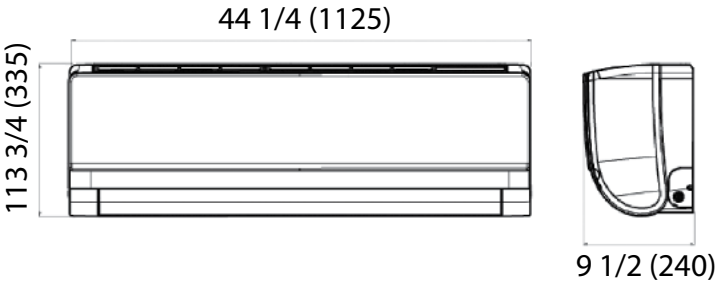

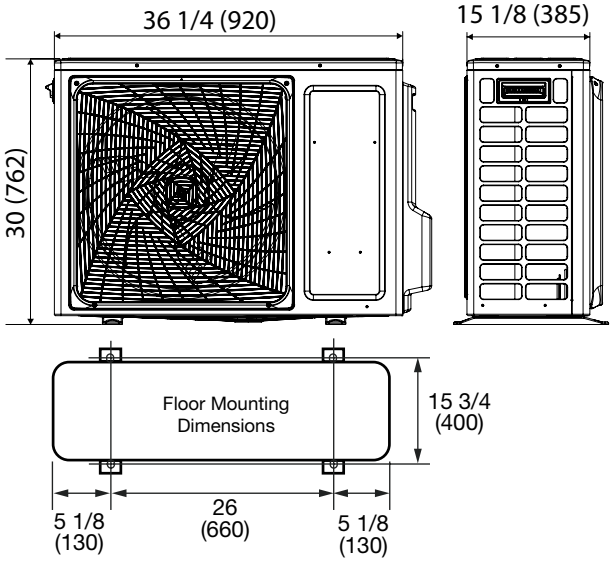

Heating Capacity Data

Outdoor Air Temp DB	Indoor Temperature								
	60°F (16°C)			70°F (21°C)			77°F (25°C)		
	Maximum Capacity (Btu/h)	Power Usage (w)	COP	Maximum Capacity (Btu/h)	Power Usage (w)	COP	Maximum Capacity (Btu/h)	Power Usage (w)	COP
-4°F (-20°C)	13,520	2,350	1.69	13,000	2,500	1.52	12,220	2,630	1.36
5°F (-15°C)	16,490	2,290	2.11	15,700	2,440	1.89	14,920	2,590	1.69
17°F (-8°C)	20,970	2,110	2.91	19,780	2,240	2.59	18,990	2,370	2.35
47°F (8°C)	28,240	2,200	3.76	26,150	2,390	3.21	24,060	2,580	2.73

Cooling Capacity Data

Outdoor Air Temp DB	Indoor Temperature								
	59°F (15°C)			68°F (20°C)			80°F (27°C)		
	Maximum Capacity (Btu/h)	Power Usage (w)	EER	Maximum Capacity (Btu/h)	Power Usage (w)	EER	Maximum Capacity (Btu/h)	Power Usage (w)	EER
14°F (-10°C)*	20,300	1,150	17.65	20,970	1,170	17.92	22,550	1,210	18.64
23°F (-5°C)	20,300	1,160	17.50	20,970	1,180	17.77	22,550	1,220	18.48
41°F (5°C)	20,300	1,170	17.35	20,980	1,190	17.63	22,560	1,230	18.34
45°F (7.2°C)	20,320	1,180	17.22	21,000	1,200	17.50	22,580	1,240	18.21
55°F (12.8°C)	20,600	1,190	17.31	21,290	1,210	17.60	22,890	1,250	18.31
65°F (18°C)	21,420	2,000	10.71	22,130	2,050	10.80	23,800	2,110	11.28
75°F (24°C)	22,680	2,000	11.34	23,440	2,040	11.49	25,200	2,100	12.00
85°F (29°C)	23,250	2,040	11.40	24,030	2,090	11.50	25,840	2,150	12.02
95°F (35°C)	23,050	2,130	10.82	23,820	2,170	10.98	25,620	2,240	11.44
105°F (41°C)	17,610	1,920	9.17	18,190	1,960	9.28	19,560	2,020	9.68
115°F (46°C)	12,610	1,030	12.24	13,030	1,050	12.41	14,010	1,080	12.97

Heating and cooling capacities and power usage are measured under the assumption of indoor humidity of 46%.
*Cooling capacities under low ambient temperatures below 23°F (-5°C) are tested when using wind baffle on outdoor unit.